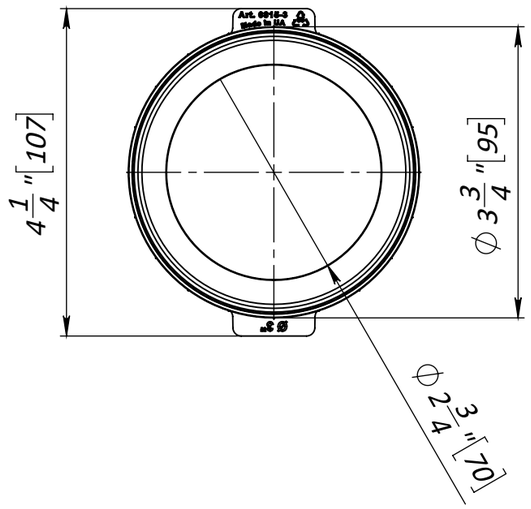

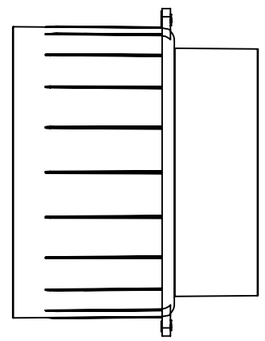

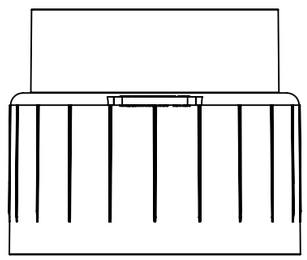

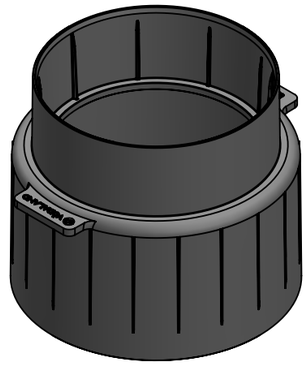

1. Deviation of the actual weight of the nominal can be up to 12%

UNLESS OTHERWISE SPECIFIED: DIMENSIONS ARE IN MILLIMETERS SURFACE FINISH: TOLERANCES: ISO 2768-c LINEAR: ANGULAR:	FINISH:		DEBURR AND BREAK SHARP EDGES	DO NOT SCALE DRAWING	REVISION
	NAME	SIGNATURE	DATE	VODALAND	
DRAWN	LYY		06.06.22	TITLE: Plastic adapter 75mm to 3in	
CHK'D	LMK				
APPV'D					
MFG					
Q.A				MATERIAL: Plastic	ARTICLE: 6815-3 A3
				WEIGHT: 0.125 lbs (0.050 kg)	SCALE: 1:2 SHEET 1 OF 1