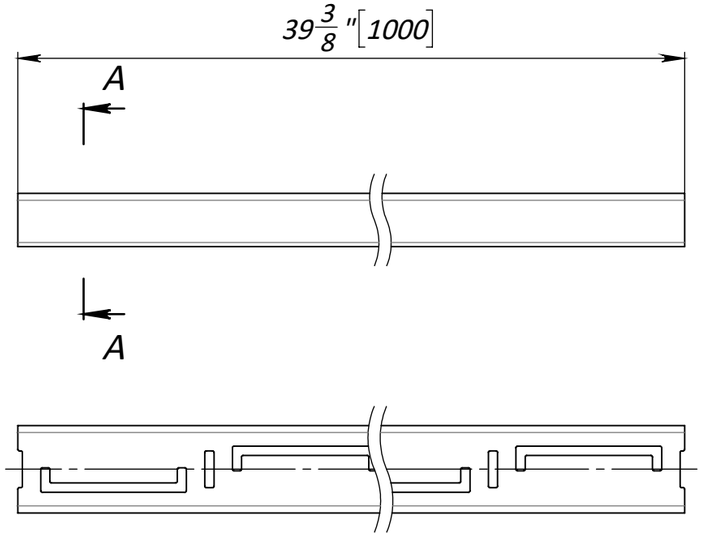

A-A (2:1)

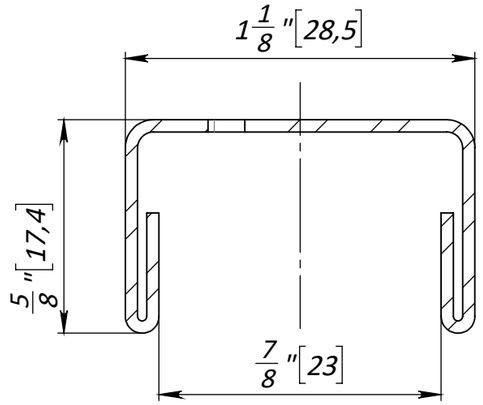

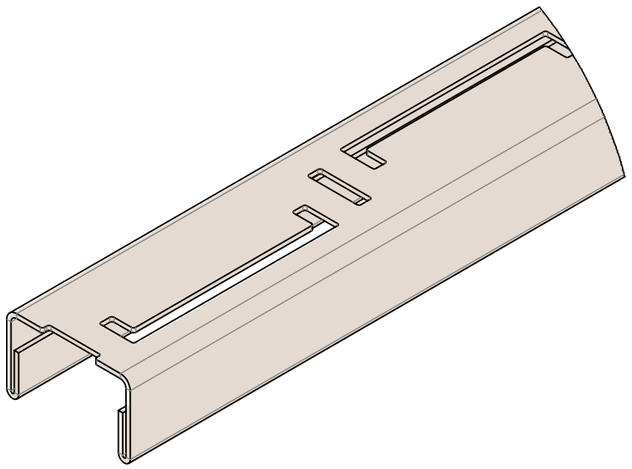

1. *Dimensions for reference, inch [mm]*
2. *Delivery and packaging are carried out in accordance with the terms of the contract*
3. *The manufacturer reserves the right, without notice to the consumer, to make changes to the design of the products for improvement of their technological and operational parameters, which will not affect the quality and properties of the product.*

UNLESS OTHERWISE SPECIFIED: DIMENSIONS ARE IN MILLIMETERS SURFACE FINISH: TOLERANCES: ISO 2768-m LINEAR: ANGULAR:	FINISH: V.2		DEBURR AND BREAK SHARP EDGES	DO NOT SCALE DRAWING	REVISION V.2
	NAME	SIGNATURE	DATE	TITLE: Stainless Steel Slot Drain Perforated Cover Modern	
DRAWN	Markovych		30.08.22		
CHK'D					
APPV'D					
MFG					
Q.A				MATERIAL: Stainless Steel (AISI 304)	ARTICLE: 6965-MD
					A3
				WEIGHT: 1.3 lb /0.61kg	SCALE:1:2 / SHEET 1 OF 1