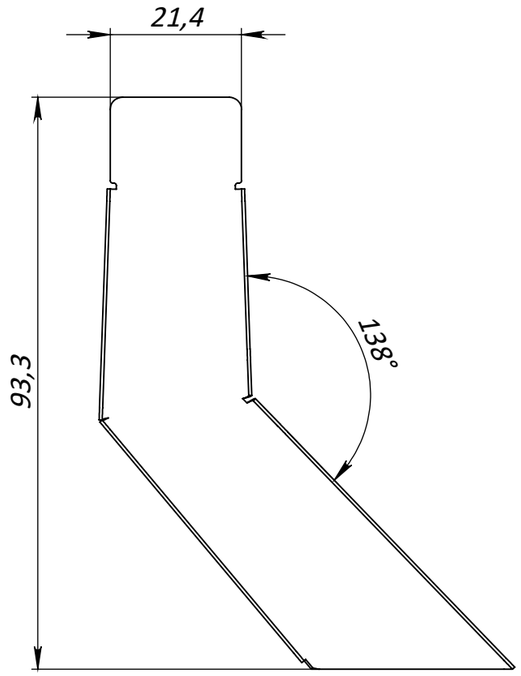


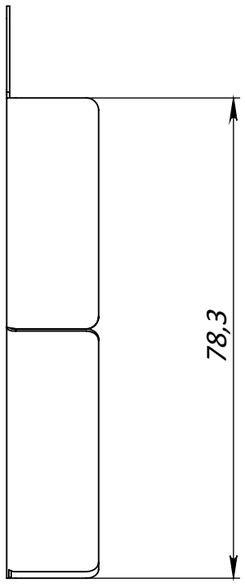


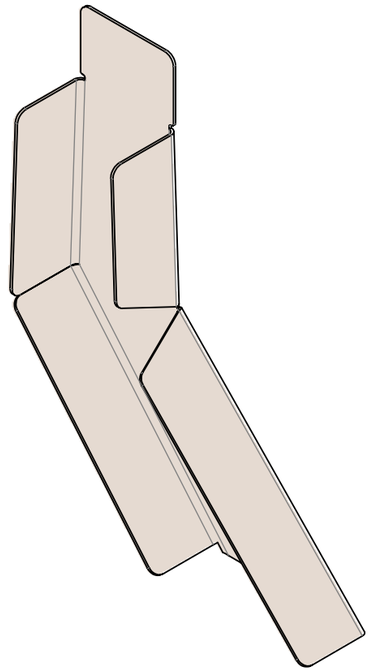

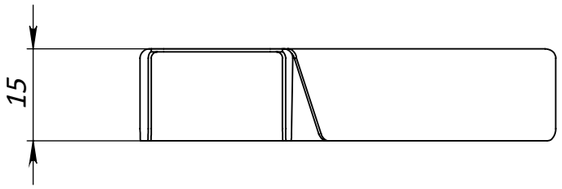


1. *Dimensions for reference*
2. *Delivery and packaging are carried out in accordance with the terms of the contract*
3. *The manufacturer reserves the right, without notice to the consumer, to make changes to the design of the products for improvement of their technological and operational parameters, which will not affect the quality and properties of the product.*

| | | | | | | |
|---|---|---|---|---|---|---|
| UNLESS OTHERWISE SPECIFIED:<br>DIMENSIONS ARE IN MILLIMETERS<br>SURFACE FINISH:<br>TOLERANCES: ISO 2768-m<br>LINEAR:<br>ANGULAR: | FINISH: | | | DEBURR AND BREAK SHARP EDGES | DO NOT SCALE DRAWING | REVISION V.2 |
| | NAME | SIGNATURE | DATE | | TITLE: Stainless Steel Endcap for Slot Drain Base L-type H100 right | |
| DRAWN | Markovych | | 01.09.22 | | | |
| CHK'D | | | | | | |
| APPV'D | | | | | | |
| MFG | | | | | | |
| Q.A | | | | MATERIAL: Stainless Steel (AISI 304) | ARTICLE: 6967-1L-100-R | A3 |
| | | | | WEIGHT: 0.02 kg | SCALE:1:1 | SHEET 1 OF 1 |