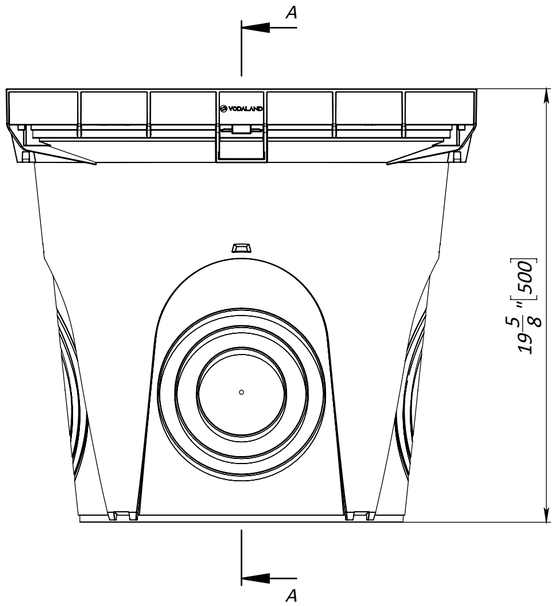

A-A

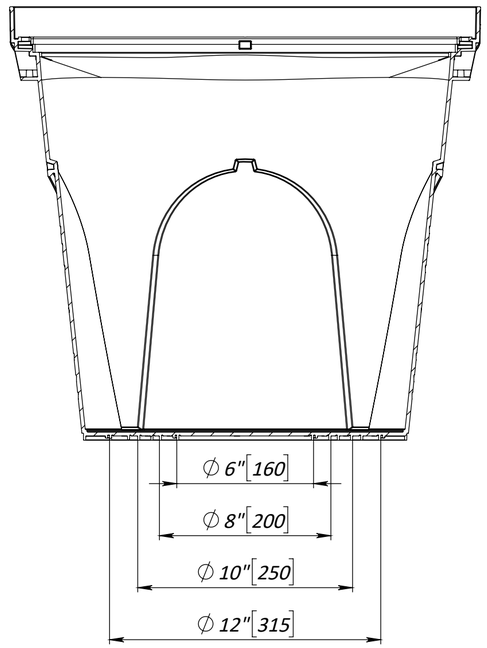

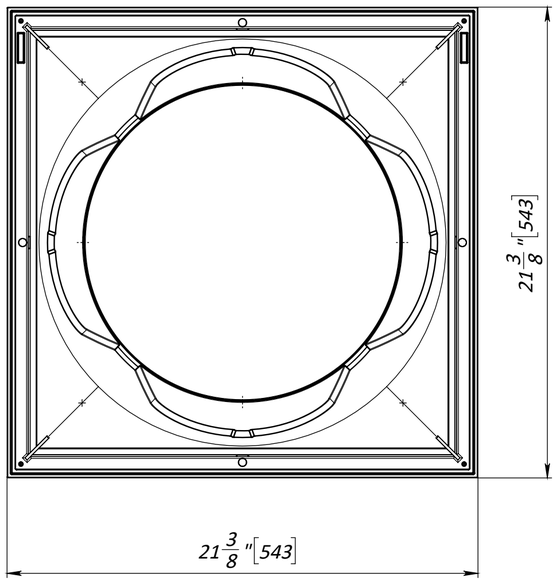

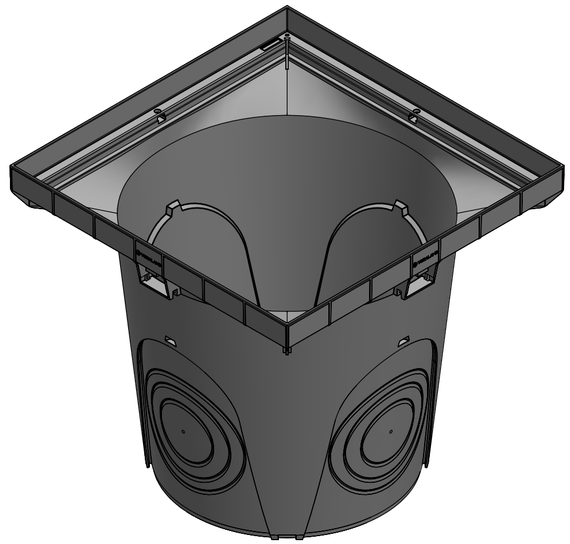

1. *Deviation of the actual weight of the nominal can be up to 8%*
2. *Dimensions for reference inch, [mm]*

UNLESS OTHERWISE SPECIFIED:
DIMENSIONS ARE IN MILLIMETERS
SURFACE FINISH:
TOLERANCES: ISO 2768-c
LINEAR:
ANGULAR:

FINISH:

DO NOT SCALE DRAWING

REVISION

VODALAND

	NAME	SIGNATURE	DATE
DRAWN	PAH		29.12.25
CHK'D	PIL		
APPV'D			
MFG			
Q.A			

MATERIAL:

WEIGHT: 8.33 lb/ 3.78 kg

TITLE:

22''x22'' NEO catch basin

ARTICLE:

857011

A2

SCALE:1:5

SHEET 1 OF 1