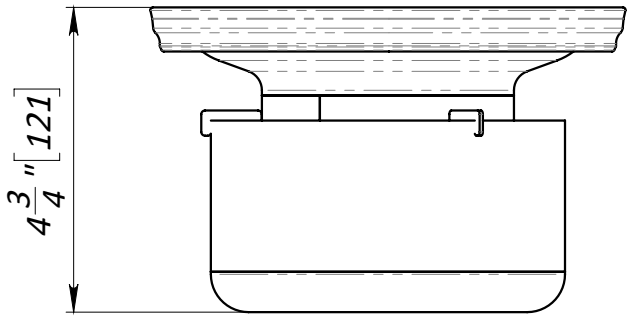

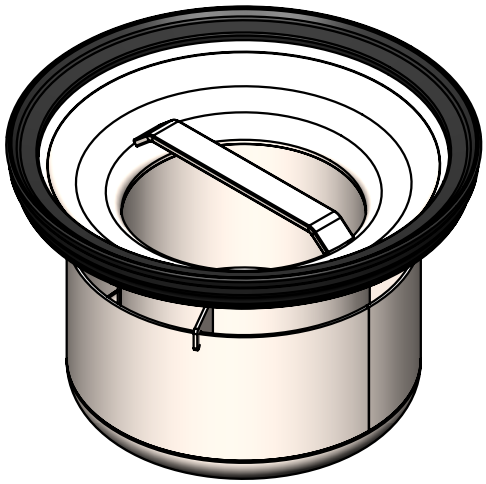

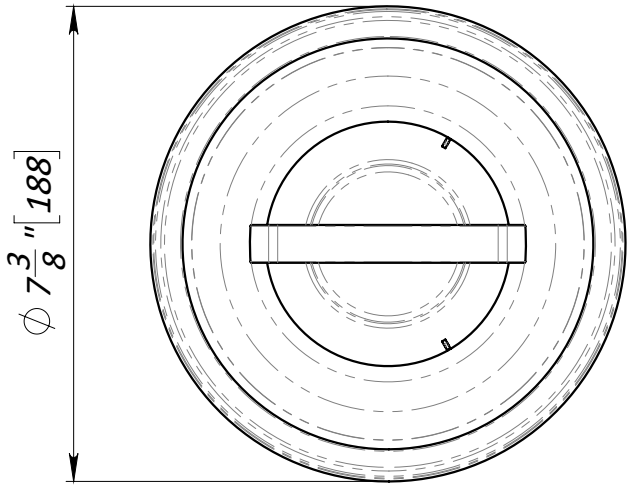

1. *Dimensions for reference, inch [mm]*
2. *Delivery and packaging are carried out in accordance with the terms of the contract*
3. *The manufacturer reserves the right, without notice to the consumer, to make changes to the design of the products for improvement of their technological and operational parameters, which will not affect the quality and properties of the product.*

UNLESS OTHERWISE SPECIFIED: DIMENSIONS ARE IN MILLIMETERS SURFACE FINISH: TOLERANCES: ISO 2768-m LINEAR: ANGULAR:	FINISH: Passivation	DEBURR AND BREAK SHARP EDGES	DO NOT SCALE DRAWING REVISION V.4 VODALAND

	NAME	SIGNATURE	DATE
DRAWN	Halushka		
CHK'D	Karetin		
APPV'D			
MFG			
Q.A			

TITLE: Stainless Steel Hydro-Lock D190

MATERIAL: Stainless Steel (AISI 304)

WEIGHT: 2.6 lb /1.18kg

ARTICLE: 993071

A4

SCALE:1:2

SHEET 1 OF 1