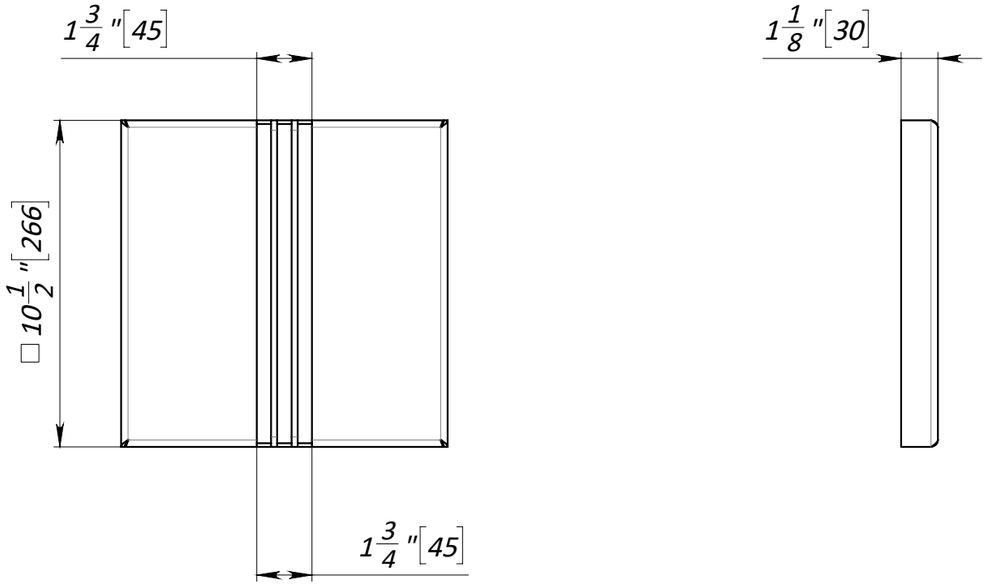

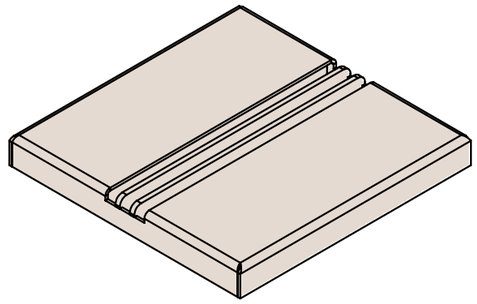

1. *Dimensions for reference, inch [mm]*
2. *Delivery and packaging are carried out in accordance with the terms of the contract*
3. *The manufacturer reserves the right, without notice to the consumer, to make changes to the design of the products for improvement of their technological and operational parameters, which will not affect the quality and properties of the product.*

UNLESS OTHERWISE SPECIFIED: DIMENSIONS ARE IN MILLIMETERS SURFACE FINISH: TOLERANCES: ISO 2768-m LINEAR: ANGULAR:	FINISH: Passivation				DEBURR AND BREAK SHARP EDGES	DO NOT SCALE DRAWING / REVISION
	NAME	SIGNATURE	DATE			TITLE: 11"x11" Stainless Steel Drain Point Cover with triple slot B125
DRAWN	Markovych		19.05.23			
CHK'D	Halushka					
APPV'D						
MFG						Load class B125
Q.A				MATERIAL: Stainless Steel (AISI 304)		ARTICLE: 994242 / A3
				WEIGHT: 10.8 lb /4.90kg		SCALE:1:5 / SHEET 1 OF 1